Worm Gear Boxes

more than just a business,
we are redefining the industry

Fenner

History

For over 140 years the name Fenner has been synonymous with the best in Mechanical Power Transmission Products and Solutions. Fenner V-Belts, Pulleyes, Couplings and Gearboxes have been trusted for performance and reliability; efficiency and economy. Fenner has been maintaining highest quality standards by using the best materials available and state-of-the-art manufacturing processes. Fenner's manufacturing facilities are ISO 9000 and TS 16949 certified and also accredited to the American Petroleum Institute (API).

Fenner has experience unrivalled anywhere in the world as manufacturers of both Belts and Pulleys. Continuous efforts in research and development of belts have been made to introduce latest types of Belt to suit every industrial requirement, like Textiles, Steel, Cement, Sugar, Paper, Power, Engineering Industry etc.

Fenner (India) limited forges ahead with same spirit, enhancing its mechanical power transmission by offering range of products worm reduction gear boxes for safe & energy efficient power transmission in most severe application. Fenner gear boxes are engineered for giving optimal life even when subjected to run under the most severe applications.

The product design of Fenner gear boxes has been based on reliability engineering & these are manufactured in ISO/TS 16949:2002 certified plant through computerized numerically controlled machines to ensure consistent quality & long life. All Fenner gear boxes are manufactured within house design reliability under high precession CNC profile grinding with internal grinding and hobbling facility. The gear boxes are tested for its reliability under stringent conditions and quality control.

The country wide marketing set up of Fenner (India) limited with dedicated team of qualified engineers & well-knit dealer network across country will always ensure suitable selection based on application and prompt availability of gear box & spares at right price.

Accolades

Acknowledgment for Direct Online Supplier for Hero Honda Motors Ltd.

TPM Excellence Award received by Madurai 1 plant

TPM Excellence Award received by Hyderabad Uplant

Award at AAR Quality Assurance Programme at Hyderabad

Sustainability award from Mahindra & Mahindra Ltd.

Long term association award from TAFE Ltd.

Sustainability Award 2010 from Mahindra & Mahindra

Outstanding contribution award given by AAM India

Award for participation in Green Vendor Development Programme given by Hero Honda Motors Ltd.

Product Features:

- The casing is made of closely grained FG-260 Grade C.I.
- The gearbox is providing with amply designed fins with suitable fan for adequate dissipation of heat generated.
- The entire design is based on BS 721: 1963 to accuracy class A.
- The gearbox design is such that it is interchangeable with the standard gear boxes.
- The worm shaft is of high quality casehardening steel very accurately generated and ground finished for better performance.
- The worm wheel is of extremely high quality phosphor bronzes sandwitch cast/spin cast with considerably substantial section, (rigidly bonded with the hub).
- Both worm and worm wheel shafts are mounted on high quality taper roller / angular contact bearings to take care of axial thrust and over hung loads.
- Subject to the limitation of 90°C temperature, under full load, all Fenner Gearbox will provide minimum gear life of 20,000 Hrs. the Gearbox requires absolutely no attention, except oil level check once in every fortnight.
- All Fenner worm Gearbox is available with Ratios of 5:1 TO 70:1.

SELECTION PROCEDURE

The selection of Gearbox is done by comparing the actual transmitted load with Catalogue ratings. However, the actual load condition may vary or fluctuate based on type of applications and to take care of the same, a service factor must be considered to arrive at Equivalent Load or Design Power. Hence,

Equivalent Load = Actual Load x Service factor

Mechanical Ratings & Service Factors

Mechanical ratings measure capacity in terms of life and / or strength, assuming 10hrs / day continuous running under uniform load conditions. In case the unit is subjected for more than 10 hrs / day operations, a Mechanical Service Factor should be chosen based on type of Prime mover, running hrs / day and type of applications where the unit is connected and its load characteristics to ensure proper Gear Life

The Catalogue ratings allow 100% overload at starting, braking or momentarily during operation, upto 10 times per day. The unit so selected should therefore have a catalogue rating at least equal to or greater than half the maximum overload it attains during its operation.

MECHANICAL SERVICE FACTOR TABLE

Type of Prime Mover	Working Hrs / Day	LOAD CLASSIFICATION OF DRIVEN MACHINE		
		Uniform Shock (U)	Moderate Shock (M)	Heavy Shock (H)
Electric Motor Steam Turbine or Hydraulic Motor	Under 3hrs / day	0.80	1.00	1.50
	3 - 10hrs / day	1.00	1.25	1.75
	Over 10hrs / day	1.25	1.50	2.00
Multi cylinder I.C Engine	Under 3 hrs / day	1.00	1.25	1.75
	3 - 10 hrs / day	1.25	1.50	2.00
	Over 10 hrs / day	1.50	1.75	2.25
Single cylinder I.C Engine	Under 3 hrs / day	1.25	1.50	2.00
	3 - 10 hrs / day	1.50	1.75	2.25
	Over 10 hrs / day	1.75	2.00	2.50

Thermal Ratings & Service Factors

Thermal rating of a Gearbox is the measure of its ability to dissipate heat. In case the unit becomes overheated, the lubricant may break down which may result to premature failure of Gears. Thermal ratings are affected by ambient temperature and not because Mechanical considerations like increased working hrs or momentary shock loads. Catalogue ratings assume 20° C ambient temperature. In case the ambient temperature is more than 20° C, the Catalogue Thermal ratings need to be divided by the factor. For sizes up to 1000, normally the Gearbox size where the catalogue Rating exceeds Design Power is selected. For bigger units, Mechanical Service factor should be applied to Mechanical Ratings and Thermal service factor for Thermal Ratings and based on higher value between these two, a unit should be selected.

Ambient Temp °C	10	20	30	40	50	60
Service Factor	0.87	1	1.16	1.35	1.62	1.97

LOAD CLASSIFICATION BY APPLICATIONS

Driven Machine	Type of Load	Driven Machine	Type of Load
Agitators & mixers		Food Industry	
Pure Liquid / Semi liquid	U	Beef slicer	M
Liquids & solids variable density	M	Cereal cooker	U
Liquids with variable density	M	Laundry Machines	
Blowers		Washers, tumblers	M
Centrifugal, vane	U	Line Shaft	M
Twin lobe	M	Mills	
Brewing & distilling		Hammers	H
Bottle machinery	U	Ball kilns, pebbles	M
Bew kettle continuous duty	U	Rod tumbling barrels	H
Cookers, scale hopper (frequent start)	M	Cement kilns	M
Cane filling Machinery	U	Dryers & coolers	M
Cane knives	M	Mixers	
Clarifiers (should be taken 24 hrs duty)	U	Concrete mixers	M
Classifiers	U	Sugar Industry	
Clay working Machinery		Cane knives	M
Brick Press, briquette machine	H	Crushers	M
Pug Mill, clay working machinery	M	Mills	H
Compressors		Oil Industry	
Centrifugal	U	Chillers	M
Twin lobe	M	Rotary Kilns	M
Reciprocating multi-cylinder	M	Paper Mill	
Reciprocating single-cylinder	H	Bleacher, conveyor, press, winder, Calenders	M
Conveyors - Uniformly loaded or fed		Agigators, beater, pulper	M
Apron, Belt , Bucket, Screw	U	Pumps	
Conveyors - Heavy Duty - Not uniformly loaded		Centrifugal	U
Apron, Belt , Bucket, Screw	M	Reciprocating (3 or more cylinders)	M
Reciprocating and shakers	M	Gear, Lobe type	U
Cranes		Rubber & Plastic Industry	
Main Hoist	M	Crackers	H
Crushers		Fixing mills	H
Ore, Stone	H	Laboratory equipment	M
Sugar	M	Refiners	M
Elevators		Sheeters	M
Bucket - uniform load	U	Tubers &Stainers	M
Bucket - heavy load	M	Warming Mills	M
Bucket - continuous load	U	Tyre & Tube Press	M
Centrifugal discharge / Gravity discharge	U	Sand Mullers, Screens	
Fans		Air washing	U
Centrifugal	U	Rotary - stone / gravel	M
ID Fan	M	Textile Industry	
Large (Mine , industrial, etc)	M	Batches	M
Light (small diameter)	U	Calenders	M
Cooling Towers	H	Cards / dry cans / dryers/ looms / mangles	M
Feeders		Dying Machinery	M
Apron feeder / Belt feeder	M	Spinners	M
Disc	U	Washers / Winders	M
Reciprocating	H	Wire drawing / Flattening machine	M
Screw	M	Wire winding machine	M

EXAMPLE : 1

A Worm Reduction Gearbox is required to select for a Belt Conveyor with non-uniform load operating 12 hrs / day. The rpm required at Conveyor Head Drum Pulley shaft is 48. The Existing Prime mover is an Electric Motor of 5 HP / 1450 rpm.

STEP :1 Ratio Required = (Input Speed / Output Speed) = 1450/48 = 30.2 : 1
Hence we can select a Gearbox with Ratio 30:1

STEP : 2 Since the Type of Driven Machine is a non-uniformly loaded conveyor, from the Load Classification chart, the type of load = M (Moderate Shock)

The working Hrs is 12 hrs. Hence from the Service Factor table, the service factor is 1.5
Hence the Design Power = Motor Power x Service Factor = 5 x 1.5 = 7.5 HP

STEP : 3 The Output rpm is 48
Hence, the Design Output Torque = (Design Power x 9550) / (output rpm x 9.81) Kgfm
= (7.5 x 9550) / (48 x 9.81) = 152.10 Kgfm

STEP : 4 From Input 1500 rpm Table with 30:1 Gear Ratio, the Design Output Torque exceeds for FU-700 Gearbox Catalogue ratings.

Hence the selected unit should be FU-700.

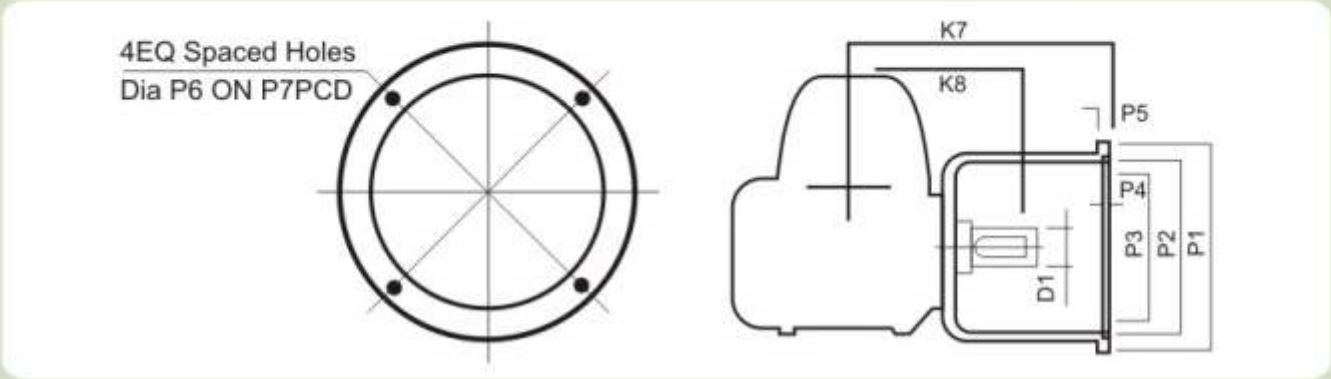

Details of adaptor and input shaft

UNIT SIZE	Motor Frame Size	D 1	K 7	K 8	P 1	P 2	P 3	P 4	P 5	P 6	P 7
FU 112	56	11	147.6	80.5	140	95 H7	75	5	12	10	115.03
FU 162	56	16	167	109.5	140	95 H7	75	5	12	10	115.03
	63		149								
	71		156		160	110 H7	86				130.03
	80,90		175		200	130 H7	120				165.03
FU 200	56	16	190.5	133.5	140	95 H7	75	5	12	10	115.03
	63		164								
	71		170		160	110 H7	86				130.03
	80,90		190		200	130 H7	120			12	165.03
FU 237	56	19	215	159	140	95 H7	75	5	12	10	115.03
	63		188								
	71		194		160	110 H7	86				130.03
	80,90		215		200	130 H7	120			12	165.03
FU 287	71	22	227	190	160	110 H7	86	5	12	12	130.03
	80,90		247		200	130 H7	120				165.03
	100		257		250	180 H7	160				
	112								15	12	215.03
FU 337	80	25	272	219	200	130 H7	120	5	12	12	165.03
	90										
	100		282		250	180 H7	160		15	12	215.03
	112										
FU 400	100, 112	32	297.5	229	250	180 H7	155	5	15	12	215.03

Foot Type 1

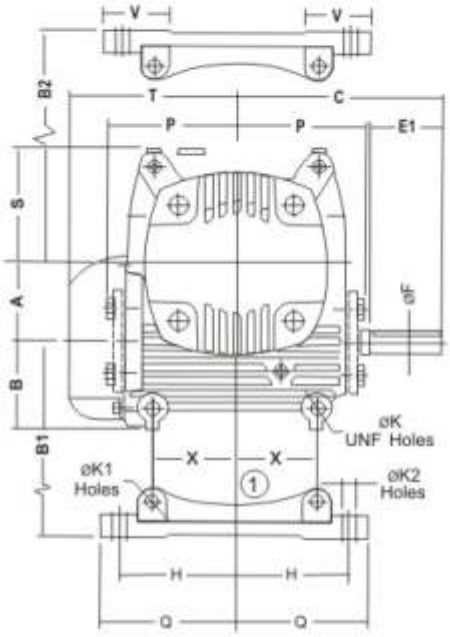

Foot Type 2

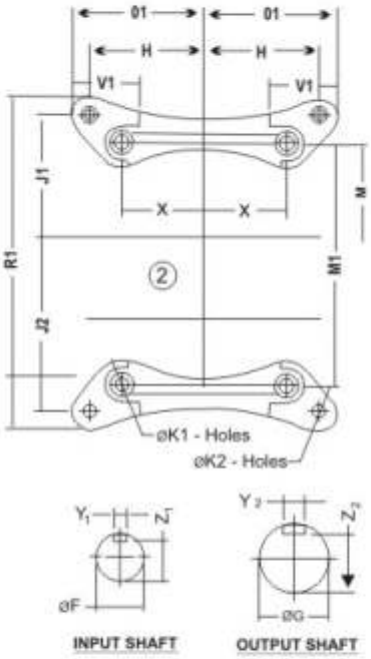

Foot Type 3

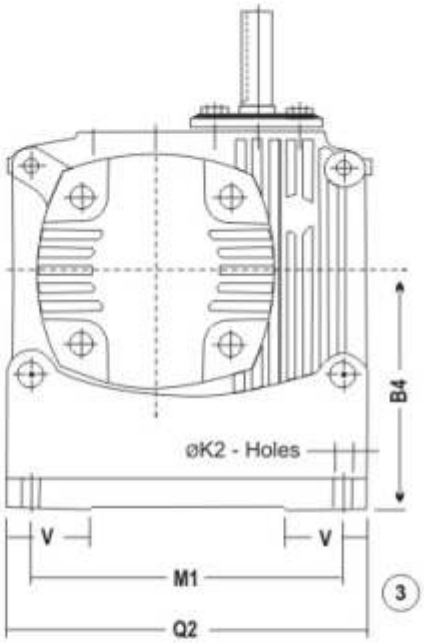

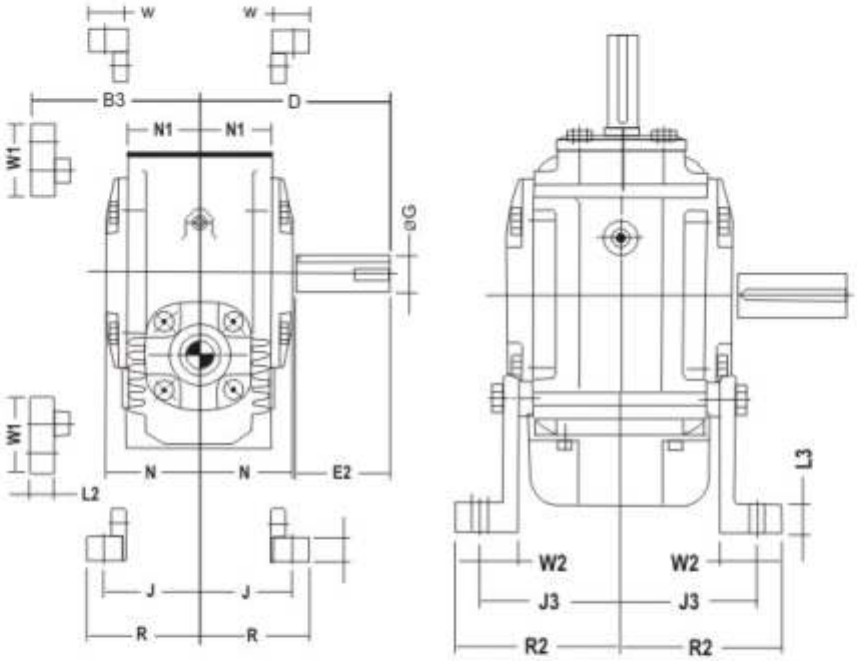

Foot No.1 in position 2
(away from input Shift)

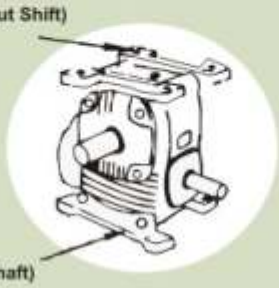

Foot No.1
in position 1
(near Output Shaft)

Foot No.2 in position 4
(near Output Shaft)

Foot No.2
in position 3
(away from Output Shaft)

Foot No.2
in position 5
(away from input Shaft)

F'U' TYPE

SIZE	A	B	C	D	E_1	E_2	F	G	K	M	M_1	N	N_1	P	S	T	X	Y_1	Y_2	Z_1	Z_2
112	28.58	44	90	79	29	11	11	16	6	41	105	41	30	62	51	91	35	4	5	8.5	13
162	41.28	51	110	98	41	16	16	19	6	48	130	49	37	71	57	89	40	5	6	13	15.5
200	50.8	59	133	117	48	16	16	25	8	60	159	59	43	86	71	111	51	5	8	13	21
237	60.32	68	159	140	57	19	19	28	10	71	187	68	51	98	84	130	60	6	8	15.5	24
287	73.02	78	191	168	70	22	22	32	11	90	225	81	64	119	103	154	76	6	10	18.5	27
337	85.72	90	219	200	83	25	25	38	13	100	260	98	76	133	116	175	86	8	10	21	33

FOOT TYPE No.1

SIZE	B_1	B_2	H	J	K_1	K_2	L	N_1	Q	R	V	W	X
112	52	57.5	52	39	7	9	13	30	62	52	35	19	35
162	60	67.3	59	45	7	10	14	37	70	60	38	22	40
200	70	81.8	76	55.75	9	10	14	43	90	73	49	29	51
237	84	99.3	87	66	10.5	12	17	51	103	85	54	32	60
287	95	123	106	82.5	12	13	21	64	124	98	60	35	76
337	110	135.7	119	93.5	13	15	22	76	139	118	67	38	86

FOOT TYPE No.2

SIZE	B_3	H	J_1	J_2	K_1	K_2	L_3	M	M_1	Q_1	R_1	V_1	W_1	X
112	54	52	56.5	79.5	7	9	13	41	105	64	164	37	41	35
162	64	59	65.5	99.5	7	10	14	48	130	71	194	40	46	40
200	70	76	82.5	121.5	9	10	14	60	159	88	228	51	52	51
237	83	87	95	140	10.5	12	17	71	187	103	267	57	59	60
287	98	106	115.5	160.5	12	13	21	89	225	124	310	65	65	76
337	114	119	129	189	13	15	22	100	260	137	360	73	73	86

FOOT TYPE No.3

SIZE	B_4	J_3	L_2	M_1	Q_2	R_2	V	W_2
112	94	56	13	105	124	65	35	29
162	102	65	14	130	150	76	38	32
200	127	75	14	159	190	89	49	38
237	146	84	17	187	219	100	54	41
287	173	102	21	225	260	119	60	48
337	194	116	22	260	298	133	67	49

All dimensions are in mm and they are subject to change for improved design performance.
Keyways are made as per IS : 2048

- Gear boxes are supplied with right hand assembly unless otherwise specified.
- Both input and output shaft extension are provided at extra cost.
- Change of hand after assembly disturbs the setting of worm wheel which should be aligned with shims.
- Mention upward / downward for vertical gear boxes.

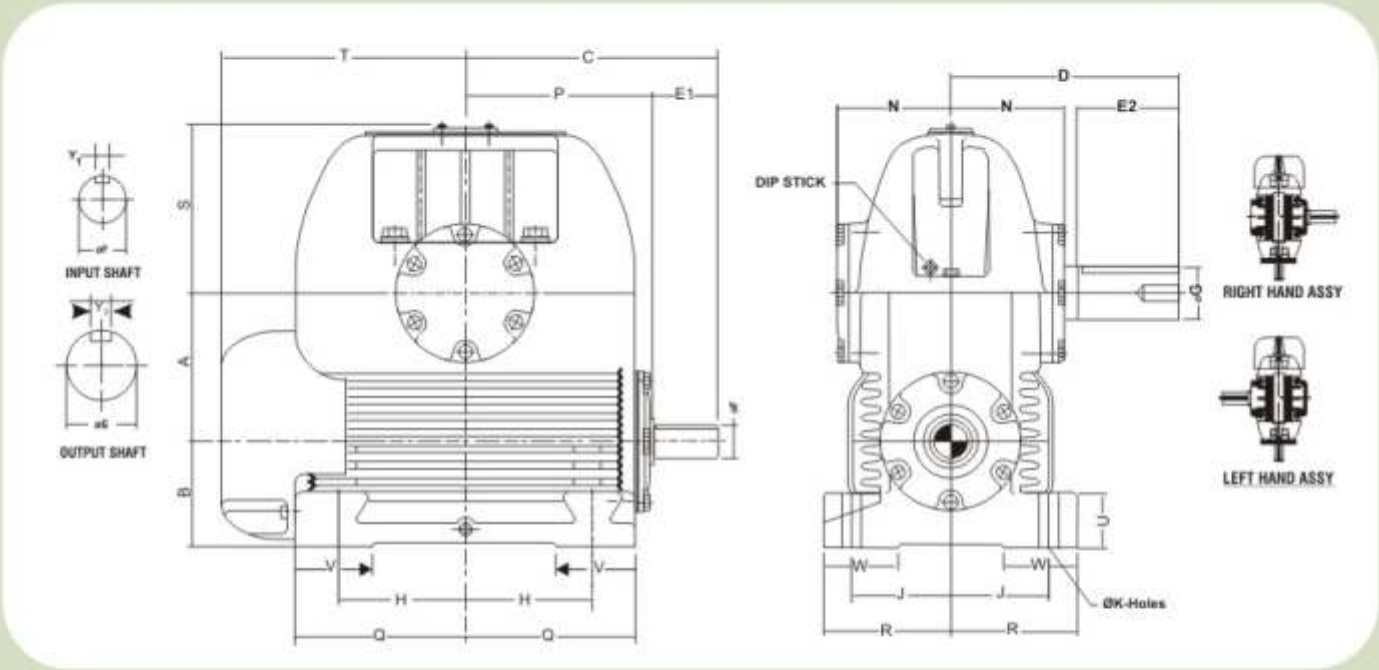

F'U' TYPE

SIZE	A	B	C	D	E1	E2	F	G	H	J	K	N	P	Q	R	S	T	U	V	W	Y1	Y2
300	76.2	102	158	186	57	75	25	38	70	91	14	107	111	102	111	127	160	30	65	65	8	10
400	101.6	108	229	216	67	89	32	45	107.9	101.6	22	121	159	140	127	137	222	44	64	76	10	12
500	127.0	114	260	248	73	102	38	50	123.8	111.1	22	133	184	164	137	159	254	54	70	83	12	14
600	152.4	127	279	273	76	114	40	58	133.4	120.6	22	140	200	179	149	184	270	64	76	89	12	16
700	177.8	146	317	298	86	127	45	65	152.4	133.4	24	151	229	208	162	210	305	70	89	98	14	18
800	203.2	146	343	311	89	140	45	70	171.5	133.4	27	159	251	230	171	235	327	76	102	102	14	20
900	228.6	159	286	197	102	146	50	75	194	149	27	187	277	254	187.5	267	346	75	112	110	14	20
1000	254.0	175	448	348	111	152	60	85	215.9	170	33	150	337	300	200	285	416	87	150	88	18	20

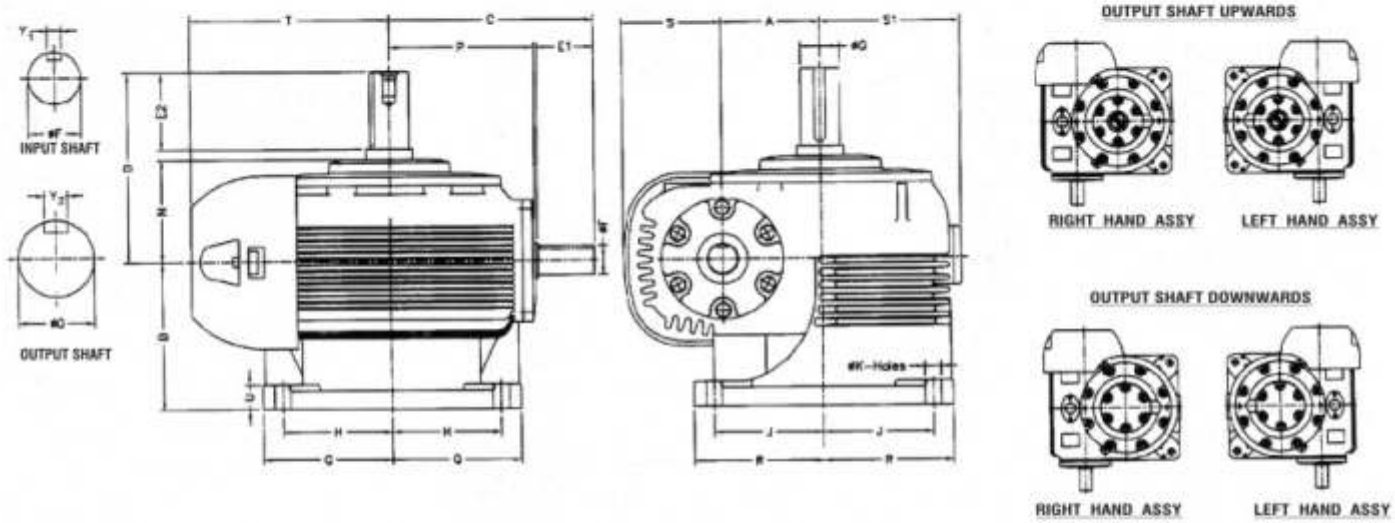

F'V' TYPE

SIZE	A	B	C	D	E1	E2	F	G	H	J	K	N	P	Q	R	S	S1	T	U	Y1	Y2
400	101.6	171.4	229	216	67	89	32	45	114.3	114.3	22	121	159	140	140	111	152	222	32	10	12
500	127.0	190.5	260	248	73	102	38	50	139.7	139.7	22	133	184	165	165	124	178	254	32	12	14
600	152.4	210	279	273	76	114	40	58	152.4	152.4	22	140	200	184	184	133	197	270	38	12	16
700	177.8	229	318	298	86	127	45	65	177.8	177.8	24	151	229	210	210	143	222	305	38	14	18
800	203.2	241	343	311	89	140	45	70	203.2	203.2	27	159	251	238	238	149	254	327	44	14	20
900	228.6	254	360	311	100	145	50	75	205	205	26	161	255	245	245	156	272	350	50	14	20
1000	254.0	279.5	314	375	111	152	55	85	260.4	260	32	194	310	311	298	164	367	377	57	16	22

POWER RATING FOR SINGLE REDUCTION GEARBOX

1500 rpm Input

INPUT SPEED	GEAR RATIO	OUTPUT SPEED	CAPACITY	SIZE DESIGNATION													
				112	162	200	237	287	337	300	400	500	600	700	800	900	1000
1500	5:1	300	Input H.P	0.65	1.5	3	3.4	7.1	10.3	8.1	16.8	27	45	60	79	100	112
			O/P Torque in Kgf-m	1.55	3.58	7.16	7.36	16.33	22.43	19.34	37.03	62.1	100.5	136.51	182.85	229	258
1500	7.5:1	200	Input H.P	0.5	1.1	2.2	3	5.7	8.6	7	11.5	21.5	31	48	66	85.2	105
			O/P Torque in Kgf-m	1.79	3.94	7.88	9.2	18.17	27.37	25.07	38.53	72.11	106.03	163.3	226.55	291	361
1500	10:1	150	Input H.P	0.45	0.95	2	2.6	4.4	7.2	6	10	19.1	27	37	48	76.9	86.2
			O/P Torque in Kgf-m	2.15	4.54	9.55	10.24	19.44	30.25	28.65	42.32	83.38	116.15	161	212.75	347	390
1500	15:1	100	Input H.P	0.31	0.8	1.4	2	3.9	5.7	4.1	7.2	12.3	21.8	29.9	40	58.4	73.4
			O/P Torque in Kgf-m	2.22	5.73	10.03	11.16	23.23	34.5	29.36	44.05	75.9	138	189.75	255.3	390	489
1500	20:1	75	Input H.P	0.25	0.7	1.05	1.5	2.9	4.3	3.6	6.2	11.2	17.2	22.9	30.4	45.9	58.1
			O/P Torque in Kgf-m	2.39	6.68	10.03	10.35	22.31	34.04	34.38	49.45	91.43	144.9	187.45	255.3	396	506
1500	25:1	60	Input H.P	0.23	0.63	0.9	1.4	2.5	3.6	3.2	5.1	9.6	13.5	21.4	28.1	39.2	48.9
			O/P Torque in Kgf-m	2.75	7.52	10.74	11.27	22.77	30.59	38.2	48.99	84.53	132.83	215.05	292.1	420	524
1500	30:1	50	Input H.P	0.18	0.5	0.8	1.2	2.2	3.6	2.8	4.5	8	12.3	17.2	22.7	32.9	43.5
			O/P Torque in Kgf-m	2.58	7.16	11.46	11.73	24.15	39.56	40.11	50.95	92.69	146.05	205.85	276	418	553
1500	40:1	37.5	Input H.P	0.13	0.35	0.6	1.1	1.7	2.9	2.2	3.8	6.3	10.2	15.1	19	29.1	39
			O/P Torque in Kgf-m	2.48	6.68	11.46	13	23.23	35.65	42.02	54.97	87.63	152.95	228.85	295.55	469	630
1500	50:1	30	Input H.P	0.11	0.3	0.5	0.92	1.4	2.3	1.9	2.9	5.1	8.4	12.3	16.4	23.2	30.7
			O/P Torque in Kgf-m	2.63	7.16	11.94	12.65	21.62	37.95	45.36	48.88	88.09	149.5	230	307.05	449	600
1500	60:1	25	Input H.P	0.09	0.22	0.45	0.87	1.1	2	1.7	2.5	4.4	7	10.3	14	19.1	25.6
			O/P Torque in Kgf-m	2.58	6.3	12.89	13.57	20.01	36.57	48.7	48.42	87.06	144.33	217.35	297.39	439	596
1500	70:1	21.4	Input H.P	0.08	0.2	0.35	0.72	1	1.8	1.4	2.2	3.8	6	8.8	11.9	15.6	21.5
			O/P Torque in Kgf-m	2.68	6.69	11.71	11.96	20.7	36.23	46.85	85.56	137.43	207	207	281.06	404	560

1000 rpm Input

INPUT SPEED	GEAR RATIO	OUTPUT SPEED	CAPACITY	SIZE DESIGNATION													
				112	162	200	237	287	337	300	400	500	600	700	800	900	1000
1000	5:1	200	Input H.P	0.52	1.1	2.2	2.6	5.2	7.6	7	13	22	32.3	43.5	58	73.9	87.8
			O/P Torque in Kgf-m	1.86	3.94	7.88	8.22	17.83	24.27	25.07	42.67	75.33	108.1	149.5	200.1	252	3.02
1000	7.5:1	133.3	Input H.P	0.4	0.9	1.8	2.3	4.5	6.4	5	9	17	24.8	35	47.5	62.8	78
			O/P Torque in Kgf-m	2.15	4.84	9.67	10.47	21.28	29.9	26.86	44.62	84.53	127.65	178.25	241.5	320	398
1000	10:1	100	Input H.P	0.34	0.75	1.6	2	3.5	5.4	4.5	8	14.8	20.8	28.8	38.5	56.6	68.4
			O/P Torque in Kgf-m	2.44	5.37	11.46	11.85	22.77	33.12	32.23	49.11	95.68	135.7	188.6	253	380	461
1000	15:1	66.7	Input H.P	0.23	0.6	1.2	1.5	2.9	4.3	3.5	5.7	9.5	16.2	22.8	30.7	40.3	54
			O/P Torque in Kgf-m	2.47	6.44	12.89	12.54	25.42	37.38	37.58	50.95	87.98	153.53	218.5	295.55	430	536
1000	20:1	50	Input H.P	0.2	0.45	0.85	1.2	2.2	3.3	3	4.8	8.7	12.6	17.3	23.4	34.7	45.2
			O/P Torque in Kgf-m	2.86	6.45	12.18	11.62	25.07	38.3	42.97	56.01	103.5	161	210.45	293.25	445	583
1000	25:1	40	Input H.P	0.18	0.5	0.7	1.1	1.8	2.5	2.6	4	6.7	10.4	15.8	21.1	29.3	36.9
			O/P Torque in Kgf-m	3.22	8.95	12.53	13	24.84	33.12	49.55	55.78	96.14	151.8	235.75	322	465	585
1000	30:1	33.3	Input H.P	0.14	0.4	0.67	0.96	1.7	2.3	2.3	3.6	6.2	9.3	12.6	17.6	25.6	33.1
			O/P Torque in Kgf-m	3.01	8.6	14.41	13.34	26.68	37.95	49.47	58.08	105.34	163.3	224.25	309.35	480	621
1000	40:1	25	Input H.P	0.1	0.3	0.5	0.86	1.3	2	1.8	3	4.9	7.8	11.2	14.5	21.5	29.4
			O/P Torque in Kgf-m	2.86	8.59	14.32	14.49	25.19	39.33	51.57	62.91	103.62	171.35	248.4	335.8	510	700
1000	50:1	20	Input H.P	0.09	0.2	0.4	0.69	1.1	1.7	1.6	2.3	4.1	6.7	10.2	12.8	17.6	23.3
			O/P Torque in Kgf-m	3.04	7.16	14.32	13.92	24.5	41.17	57.3	55.66	101.78	172.5	273.7	351.9	500	673
1000	60:1	16.7	Input H.P	0.07	0.18	0.35	0.58	0.88	1.6	1.5	2	3.4	5.4	8.3	10.9	14.9	20
			O/P Torque in Kgf-m	3	7.72	15.01	13.23	22.43	40.17	64.33	54.74	98.33	161	253	338.1	498	670
1000	70:1	14.3	Input H.P	0.06	0.15	0.3	0.58	0.81	1.4	1.3	1.7	3	4.7	7	9.2	11.4	16.3
			O/P Torque in Kgf-m	3.01	7.51	15.03	13.8	22.89	40.83	65.11	54.05	97.18	156.4	234.6	338.1	432	620

750 rpm Input

INPUT SPEED	GEAR RATIO	OUTPUT SPEED	CAPACITY	SIZE DESIGNATION													
				112	162	200	237	287	337	300	400	500	600	700	800	900	1000
750	5:1	150	Input H.P	0.44	0.9	1.9	2.2	4.3	6.1	6	11	17.5	24.8	34	44.3	60.8	71.9
			O/P Torque in Kgf-m	2.1	4.3	9.07	8.97	19.09	25.99	28.65	47.84	79.12	109.83	151.69	202.4	275	326
750	7.5:1	100	Input H.P	0.35	0.75	1.55	2	3.7	5.2	4.4	7.6	14.5	20.2	27.5	36.9	51.1	62.5
			O/P Torque in Kgf-m	2.51	5.37	11.1	11.5	23	32.2	31.51	50.26	95.91	137.2	186.3	249.55	345	423
750	10:1	75	Input H.P	0.28	0.65	1.3	1.8	2.9	4.4	3.7	6.5	12.2	17.4	23.8	31.6	46.6	56.4
			O/P Torque in Kgf-m	2.67	6.21	12.41	13.23	24.84	35.88	35.33	54.05	104.19	152.95	207	274.85	415	5.4
750	15:1	50	Input H.P	0.22	0.5	1	1.3	2.4	3.5	2.8	4.7	7.9	13.4	18.2	24.6	34.3	44.4
			O/P Torque in Kgf-m	3.15	7.16	14.32	13.8	27.6	40.48	40.11	55.89	96.14	168.59	231.15	315.1	450	585
750	20:1	37.5	Input H.P	0.16	0.45	0.9	0.98	1.8	2.7	2.4	4.1	7.1	10.4	14.1	19.2	28.3	37.5
			O/P Torque in Kgf-m	3.06	8.59	17.19	12.88	26.45	41.29	45.84	61.53	110.86	174.46	231.15	319.01	480	640
750	25:1	30	Input H.P	0.15	0.45	0.8	0.91	1.5	2.1	2.1	3.4	5.5	8.4	12.8	17.3	23.9	30.5
			O/P Torque in Kgf-m	3.58	10.74	19.1	14.49	27.03	36.11	50.13	61.41	105	159.85	254.15	354.2	500	640
750	30:1	25	Input H.P	0.12	0.35	0.63	0.81	1.4	2	1.8	3	5.2	7.6	10.3	14.5	20.7	27
			O/P Torque in Kgf-m	3.44	10.03	18.05	14.84	28.75	40.83	51.57	63.83	116.15	175.49	236.9	334.88	510	670
750	40:1	18.75	Input H.P	0.09	0.25	0.45	0.73	1.1	1.7	1.4	2.6	3.9	6.3	9	11.5	17.7	24.1
			O/P Torque in Kgf-m	3.44	9.55	17.19	15.99	28.52	43.93	53.48	68.77	106.38	179.4	263.35	349.6	551	749
750	50:1	15	Input H.P	0.07	0.18	0.32	0.6	0.87	1.4	1.1	2	3.4	5.6	7.6	9.9	14.4	19.1
			O/P Torque in Kgf-m	3.34	8.59	15.28	15.41	26.68	44.16	52.52	61.64	109.94	189.75	273.7	358.8	535	721
750	60:1	12.5	Input H.P	0.06	0.15	0.3	0.5	0.74	1.2	1	1.7	2.8	4.5	7.1	9.2	12.3	16.9
			O/P Torque in Kgf-m	3.44	8.59	17.19	14.38	24.27	41.98	57.3	59.69	106.72	175.38	278.3	367.54	534	740
750	70:1	10.7	Input H.P	0.05	0.31	0.25	0.48	0.67	1.2	0.9	1.4	2.5	3.9	5.8	7.7	9.3	13.2
			O/P Torque in Kgf-m	3.35	20.75	16.73	14.49	24.38	44.16	60.24	58.65	105.23	167.9	255.3	340.52	455	658

500 rpm Input

INPUT SPEED	GEAR RATIO	OUTPUT SPEED	CAPACITY	SIZE DESIGNATION													
				112	162	200	237	287	337	300	400	500	600	700	800	900	1000
500	5:1	100	Input H.P	0.3	0.8	1.4	1.38	2.1	3.4	4.5	4.94	9.09	13.04	17.29	22.7	46	54.6
			O/P Torque in Kgf-m	2.15	5.73	10.03	10.38	21.74	29.44	32.23	55.32	84.64	114.43	163.3	206.43	310	369
500	7.5:1	66.7	Input H.P	0.25	0.6	1.2	1.38	2.1	3.4	3.2	4.94	9.09	13.04	17.29	22.7	36.9	44.9
			O/P Torque in Kgf-m	2.68	6.44	12.89	13.8	24.27	36.57	34.36	54.74	105.46	148.7	200.56	266.92	370	452
500	10:1	50	Input H.P	0.22	0.5	1	1.38	2.1	3.4	2.5	4.94	9.09	13.04	17.29	22.7	34.9	42.3
			O/P Torque in Kgf-m	3.15	7.16	14.32	15.64	25.65	41.4	35.81	60.72	115	166.87	222.53	293.71	459	560
500	15:1	33.3	Input H.P	0.15	0.4	0.8	0.99	1.89	2.68	2	3.7	5.9	9.81	13.32	17.8	25.4	33.7
			O/P Torque in Kgf-m	3.23	8.6	17.21	16.33	31.86	46	43.02	62.79	106.38	182.74	250.01	337.53	490	655
500	20:1	25	Input H.P	0.13	0.3	0.6	0.79	1.4	2.1	1.7	3.1	5.2	7.79	10.43	14.2	21.4	28.6
			O/P Torque in Kgf-m	3.72	8.59	17.19	15.07	31.05	47.15	48.7	69.58	120.75	192.28	250.93	347.65	530	718
500	25:1	20	Input H.P	0.12	0.35	0.5	0.74	1.21	1.62	1.5	2.6	4.3	6.2	9.43	12.89	18.1	23.1
			O/P Torque in Kgf-m	4.3	12.53	17.91	17.02	31.28	40.94	53.72	69	119.03	173.08	278.3	388.13	550	710
500	30:1	16.7	Input H.P	0.09	0.03	0.5	0.65	1.12	1.56	1.3	2.3	4	5.72	7.8	10.7	15.3	20.3
			O/P Torque in Kgf-m	3.86	1.07	21.44	17.14	33.12	47.15	55.75	71.53	128.8	194.01	257.6	360.64	549	740
500	40:1	12.5	Input H.P	0.06	0.2	0.88	0.6	0.87	1.33	1	1.87	3.02	4.93	6.7	8.72	13.5	18.2
			O/P Torque in Kgf-m	3.44	11.46	50.42	18.98	32.43	50.6	57.3	74.29	122.02	211.72	293.37	387.78	6.1	818
500	50:1	10	Input H.P	0.06	0.15	0.33	0.45	0.67	1	0.8	1.5	2.6	4.3	6.07	7.68	11	14.6
			O/P Torque in Kgf-m	3.94	10.74	23.63	1695	29.56	44.16	57.3	67.16	121.9	210.45	320.39	406.18	580	790
500	60:1	8.3	Input H.P	0.04	0.1	0.2	0.37	0.56	0.82	0.7	1.3	2.2	3.5	5.5	7	9.16	12.8
			O/P Torque in Kgf-m	3.71	8.63	17.26	15.53	26.68	40.71	60.4	66.01	119.6	196.65	308.2	406.87	566	817
500	70:1	7.1	Input H.P	0.04	0.09	0.15	0.34	0.51	0.86	0.6	1.1	1.9	3	4.6	5.9	6.97	9.97
			O/P Torque in Kgf-m	4.03	9.08	15.13	15.3	26.8	45.54	60.52	65.55	116.15	186.88	284.05	376.74	485	710

Power rating for Double Reduction Gearbox

1500 rpm Input

INPUT SPEED	GEAR RATIO	OUTPUT SPEED	CAPACITY	SIZE DESIGNATION												
				162	200	237	287	337	300	400	500	600	700	800	900	1000
1500	150:1	10	Input H.P	0.24	0.41	0.63	1.05	1.68	0.99	1.89	3.36	5.25	7.25	9.87	13	16
			O/P Torque In Kfg - m	10.5	18.59	29.4	49.88	77.7	46.94	94.61	171.15	279.3	399	546	718	900
1500	300:1	5	Input H.P	0.17	0.32	0.46	0.63	0.97	0.53	1.26	2.1	3.26	4.41	6.3	7.5	9.9
			O/P Torque In Kfg - m	11.55	23.52	35.7	53.55	82.95	46.31	111.3	201.6	315	430.5	626.85	757	1019
1500	500:1	3	Input H.P	0.13	0.22	0.27	0.54	0.77	0.48	0.91	1.58	2.21	3.26	4.2	5.2	6.8
			O/P Torque In Kfg - m	12.39	22.68	38.01	60.9	89.25	56.91	120.75	221.55	346.5	496.65	664.65	833	1100
1500	1000:1	1.5	Input H.P	0.08	0.14	0.23	0.35	0.5	0.25	0.61	1.05	1.47	2.21	2.63	3.2	4
			O/P Torque In Kfg - m	12.6	22.68	42.74	67.83	98.28	49.98	127.05	217.35	339.15	546	716.1	856	1090
1500	2000:1	0.75	Input H.P	0.04	0.07	0.11	0.18	0.33	0.15	0.37	0.61	0.84	1.37	1.79	2.1	2.7
			O/P Torque In Kfg - m	11.45	19.85	32.13	55.97	83.48	46.2	130.2	224.7	331.8	554.4	757.05	892	1171
1500	3000:1	0:05	Input H.P	0.02	0.04	0.05	0.11	0.15	0.11	0.25	0.46	0.58	1.02	1.37	1.3	1.9
			O/P Torque In Kfg - m	8.01	14.39	22.05	42.53	64.05	44.52	116.55	232.05	306.6	562.8	771.75	773	1129

1000 rpm Input

INPUT SPEED	GEAR RATIO	OUTPUT SPEED	CAPACITY	SIZE DESIGNATION												
				162	200	237	287	337	300	400	500	600	700	800	900	1000
1000	150:1	6.67	Input H.P	0.18	0.32	0.48	0.84	1.26	0.76	1.47	2.52	3.99	5.67	7.35	9.4	12
			O/P Torque In Kfg - m	11.34	20.27	32.13	54.6	84.84	51.45	103.95	185.85	306.6	446.25	594.3	778	1021
1000	300:1	3.33	Input H.P	0.13	0.23	0.35	0.47	0.72	0.41	0.83	1.47	2.21	3.26	4.73	5.5	7.4
			O/P Torque In Kfg - m	12.6	24.57	37.91	58.49	89.78	50.82	118.65	221.55	341.25	464.1	704.55	822	1100
1000	500:1	2	Input H.P	0.09	0.17	0.25	0.4	0.58	0.37	0.69	1.26	1.68	2.42	2.94	3.9	5
			O/P Torque In Kfg - m	12.6	24.26	40.43	65.1	95.55	60.9	129.15	234.15	359.1	525	664.65	897	1160
1000	1000:1	1	Input H.P	0.06	0.11	0.17	0.25	0.39	0.19	0.46	0.77	1.16	1.68	2	2.4	2.9
			O/P Torque In Kfg - m	13.44	23.31	43.89	68.25	106.05	54.29	133.35	227.85	364.35	552.3	728.7	912	1103
1000	2000:1	0.5	Input H.P	0.03	0.005	0.07	0.13	0.2	0.11	0.27	0.45	0.61	0.99	1.26	1.6	1.9
			O/P Torque In Kfg - m	11.87	21	33.81	58.8	89.04	49.04	134.4	232.05	333.9	556.5	761.25	944	1186
1000	3000:1	0:33	Input H.P	0.02	0.03	0.04	0.07	0.11	0.08	0.18	0.35	0.41	0.74	0.95	1	1.4
			O/P Torque In Kfg - m	8.01	14.49	22.05	43.05	64.05	47.78	116.55	241.5	307.65	567	782.25	829	1129

750 rpm Input

INPUT SPEED	GEAR RATIO	OUTPUT SPEED	CAPACITY	SIZE DESIGNATION												
				162	200	237	287	337	300	400	500	600	700	800	900	1000
750	150:1	5	Input H.P	0.15	0.26	0.4	0.68	1.02	0.63	1.16	2.1	3.26	4.62	5.99	7.8	9.7
			O/P Torque In Kfg - m	12.08	21.42	34.13	58.49	88.2	54.6	109.2	192.15	327.6	469.35	619.5	846	1047
750	300:1	2.5	Input H.P	0.11	0.19	0.28	0.38	0.6	0.33	0.76	1.37	2	2.73	3.89	4.6	5.8
			O/P Torque In Kfg - m	13.13	25.52	38.85	59.85	95.03	52.92	124.95	232.25	357	483	724.5	862	1116
750	500:1	1.5	Input H.P	0.07	0.14	0.2	0.33	0.47	0.3	0.56	0.97	1.37	1.89	2.31	3.2	4
			O/P Torque In Kfg - m	12.81	24.99	40.74	66.89	98.91	64.37	133.35	238.35	360.15	543.9	669.06	957	1193
750	1000:1	0.75	Input H.P	0.05	0.08	0.11	0.2	0.34	0.21	0.38	0.62	0.89	1.26	1.58	2	2.3
			O/P Torque In Kfg - m	13.65	23.84	44.1	68.25	114.45	56.7	136.5	234.15	370.65	555.45	729.75	955	1113
750	2000:1	0.38	Input H.P	0.02	0.04	0.07	0.11	0.17	0.09	0.22	0.37	0.48	0.78	1.05	1.3	1.6
			O/P Torque In Kfg - m	11.87	21.74	33.92	60.9	91.35	51.87	134.4	236.25	333.9	557.55	761.25	987	1186
750	3000:1	0.25	Input H.P	0.01	0.02	0.03	0.06	0.09	0.07	0.15	0.28	0.34	0.6	0.75	0.78	1.06
			O/P Torque In Kfg - m	8.01	14.49	22.05	43.05	64.05	49.14	116.55	241.5	307.65	567	788.55	839	1129

500 rpm Input

INPUT SPEED	GEAR RATIO	OUTPUT SPEED	CAPACITY	SIZE DESIGNATION												
				162	200	237	287	337	300	400	500	600	700	800	900	1000
500	150:1	3.33	Input H.P	0.11	0.19	0.29	0.5	0.77	0.47	0.95	1.58	2.52	3.36	4.2	5.8	7
			O/P Torque In Kfg - m	12.6	22.37	35.7	61.95	94.19	58.59	126	205.8	362.25	504	627.9	906	1100
500	300:1	1.67	Input H.P	0.07	0.14	0.19	0.26	0.42	0.24	0.56	1	1.47	2	2.73	3.4	4.1
			O/P Torque In Kfg - m	13.65	26.57	38.85	59.85	95.03	56.18	133.35	246.75	359.1	518.7	735	921	1116
500	500:1	1	Input H.P	0.05	0.09	0.15	0.23	0.35	0.23	0.4	0.68	0.91	1.37	1.58	2.4	2.8
			O/P Torque In Kfg - m	12.81	25.73	41.48	68.25	103.01	69.09	134.4	241.5	362.25	557.55	672	1005	1200
500	1000:1	0.5	Input H.P	0.04	0.06	0.09	0.14	0.26	0.13	0.26	0.45	0.62	0.91	1.1	1.5	1.7
			O/P Torque In Kfg - m	13.65	24.26	44.1	68.25	120.75	59.53	136.5	238.35	372.75	561.75	729.75	1016	1130
500	2000:1	0.25	Input H.P	0.02	0.03	0.05	0.11	0.13	0.07	0.16	0.26	0.35	0.57	0.72	1	1.09
			O/P Torque In Kfg - m	11.87	21.84	34.34	60.9	92.4	55.23	134.4	236.25	333.9	561.75	761.25	1055	1186
500	3000:1	0.17	Input H.P	0.01	0.02	0.02	0.05	0.06	0.05	0.11	0.21	0.24	0.43	0.56	0.62	0.75
			O/P Torque In Kfg - m	8.01	14.49	22.05	43.05	64.05	52.19	116.55	241.5	307.65	567	796.95	914	1129

Direction of Rotation

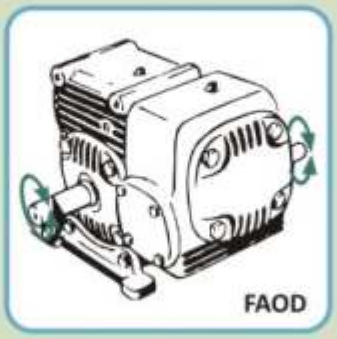
FAOD

FAUD

FAVD

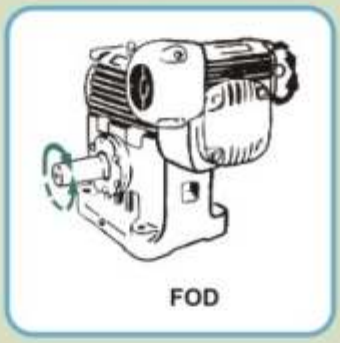
FOD

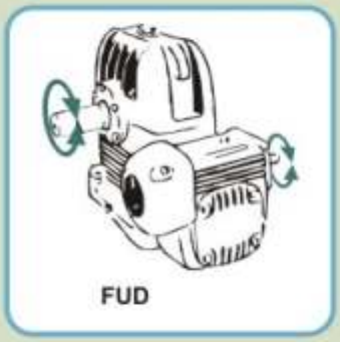
FUD

FVD

MOUNTING ARRANGEMENTS

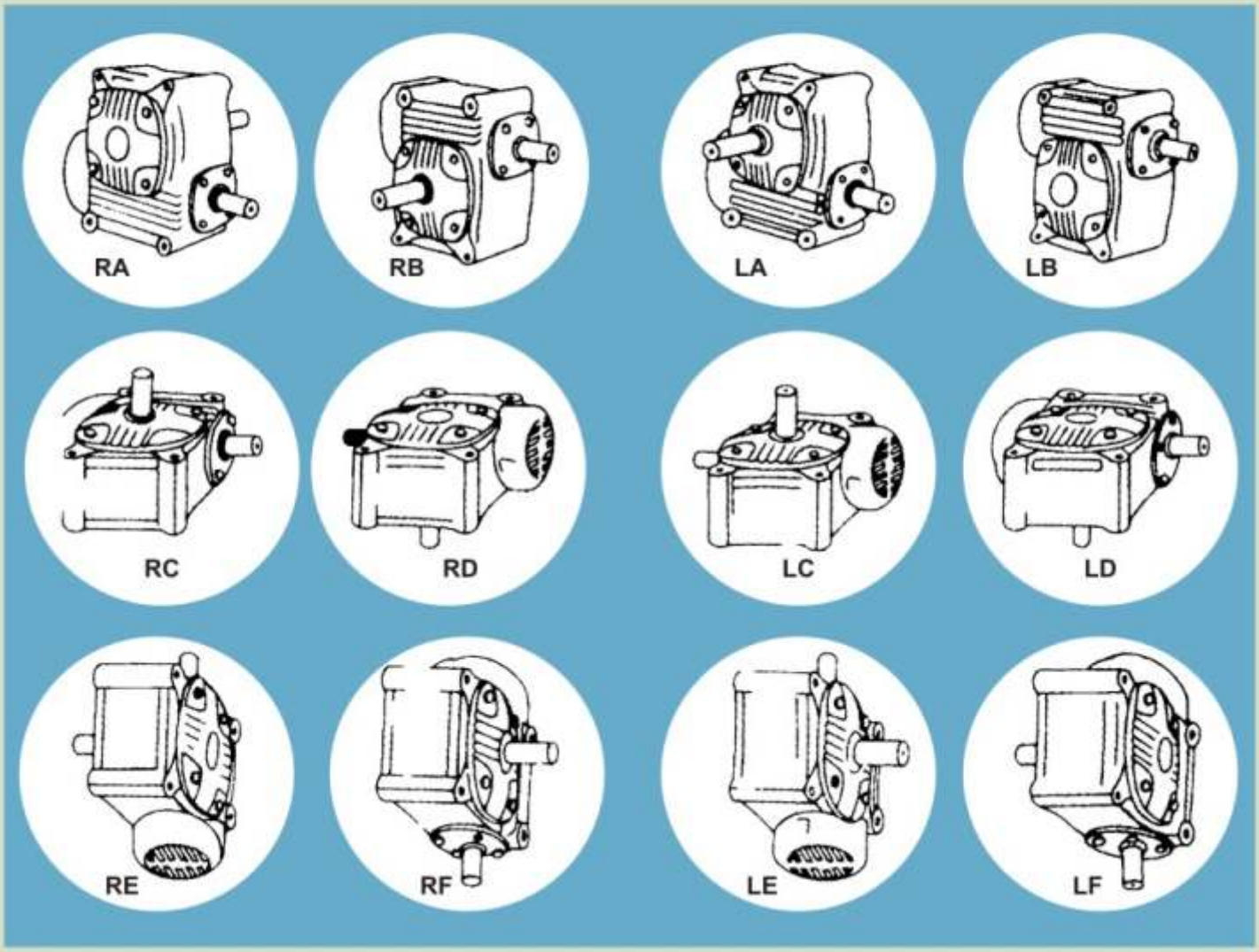

TYPICAL CATALOGUE NUMBER

FU	112	50	LA	1	1
Type Designation	Size Designation	Nominal Ratio	Handing & Space Mounting	Type of Feet	Position of Feet

Full details from the nameplate should be specified for spare parts.

INSTALLATION AND MAINTENANCE

INSTALLATION

Gear boxes are to be rigidly mounted so as to minimize the effect of fluctuating or heavy loads. Always check the alignment has taken place, properly locate the gear until by means of dowels at appropriate locations preferably in diagonal direction.

The use of flexible couplings (love joy / Gear coupling flanges with rubber bushes/tyre couplings) are very important for the improved performance of the gearbox. The couplings are to be lined up to avoid the mis alignment of angularity and eccentricity.

CHANGE OF HANDING

When changing the handing of the slow shaft extension, the shaft complete with wormwheel, bearings , etc. should be reversed as a unit. it should be appreciated that this has the effect of reversing the offset of the wheel relative to the worm. when changing the slow speed shaft handling of V type units, it should be noted that the position of the wheel relative to the case must not be changed; it is necessary therefore to press the wheel from the shaft. the position of the shaft in relation to the wormwheel must be reversed. The end covers should be located in their respective positions.

It is necessary to check contact markings on the worm wheel teeth and if any axial adjustment of the worm wheel is necessary, it can be effected by means of the shims between covers and bearing housing which should be moved from one side to other. it is essential that the top half of the gear case be replaced in its original position (Not applicable for Adaptables.)

The contact marking is checked by painting the worm with red lead Prussion Blue and rotating the worm by hand while applying a small breaking pressure to the wheel by hand.

The correct marking should be slightly heavier on the "leaving side" of the teeth, relative to the direction of rotation of the worm, so as to provide "lead in' for the lubricant and to avoid concentration of pressure on the entering side as this would affect the smoothness of operation.

INCORRECT
Move Wheel

CORRECT
Contact marking clear on entering side to provide oil "Lead in" worm running under load

INCORRECT
Move Wheel

AXIAL FLOATS

After re-handling it is essential that shaft and floats be correctly set. the following axial floats for wormshaft and wheelshaft are recommended. they should be checked preferably using a dial indicator gauge mounted on a magnetic base.

Size	Wormshaft (mm)	Wheelshaft (mm)
112	0.050/0.100	0.025/0.050
162	0.050/0.100	0.025/0.050
200	0.050/0.100	0.025/0.050
237	0.050.0.100	0.025/0.050
287	0.050/0.100	0.025/0.050
337	0.050/0.100	0.025/0.050

Size	Wormshaft (mm)	Wheelshaft (mm)
300	0.5/0.100	0.25/0.05
400	0.050/0.100	0.025/0.050
500	0.050/0.100	0.025/0.050
600	0.050/0.100	0.025/0.050
700	0.075/0.125	0.025/0.075
800	0.075/0.125	0.025/0.075

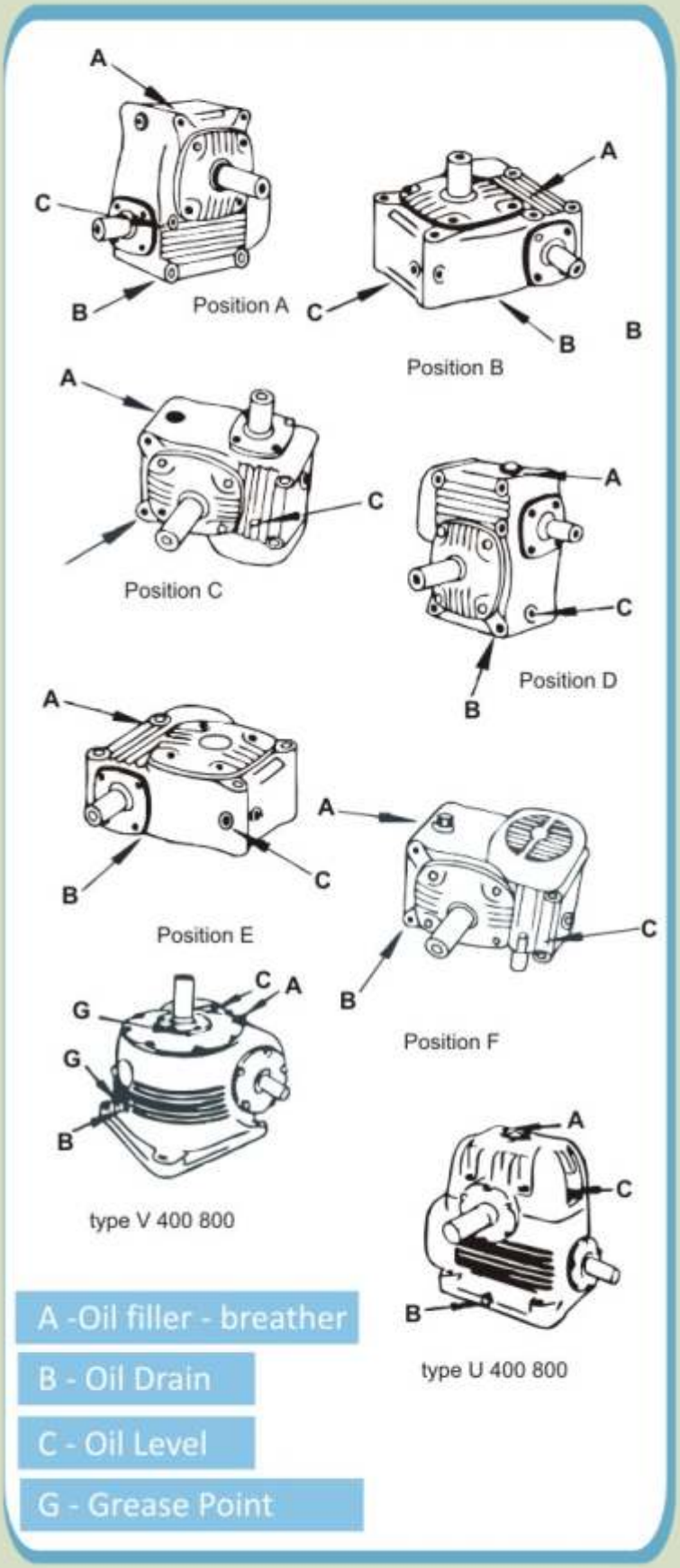

LUBRICATION

The Lubrication system of Fenner Worm Reduction Gearbox is self-contained positive and automatic at all speeds of operations and in either direction of rotation. Adaptable units are provided with breather, oil level and drain plugs and it must be ensured that these are correctly positioned as per attached diagram. For other units, dipstick is provided for checking oil level along with oil filter cum ventilator plug and drain plug. These are also shown in the adjoining diagram.

All Fenner Gearboxes are supplied without Oil and it must be filled with correct Grade Of Lubricant to the correct level. It is most Important to ensure that Gearbox are not Over filled. Any sort of over filling may result In Oil churning resulting in over-heating And oil leakage. It is also important to ensure that the Breather plug is clean. Any dust accumulation Or un-wanted paint over the breather plug Will cause pressure build-up and may result to oil leakage.

RECOMMENDED LUBRICANT	
Brand	Grade
Indian Oil	Servomesh SP320 or Servosystem 320
Bharat Petroleum	Cabol 320 or Amocam 320
Hindustan Petroleum	Enklo 320 or Parthan EP 320
Gulf	Gulf harmony 320 or Gulf EP 320
Castrol	Alfa Zn 320 or Alpha Sp-320 or Tribol 1100/320 TGQA
Veedol	Avalon 320
Fuchs	Renolin CKC 320
Shell	Vitera Oil 320 or Omela 320
BalmerLawrie Fuchs	Renolin CKC 320

Polyglycol based synthetic Lubricants may also be used to improve the transmission capacity of Gearbox. It has been observed that the overall performance of Gearbox is improved up to 20% while using Polyglycol based lubricants compared to Mineral Oil at same working temperature. Such type of Gear Oil exhibit excellent non-ageing stability resulting in considerable improve-ment on overall efficiency of Gearbox.

Brand	Grade
Castrol	Tribol 800 - 220
Fuchs	RenolinPG 220

While using Synthetic Lubricants, the Gearbox must be properly flushed. Synthetic Lubricants should not be mixed with any other type of oil

CHANGE OF OIL :

To have a long and trouble free life of Gearbox, periodic change of Lubricant is extremely essential. The necessity of change of Oil is normally determined on the Type of Oil used, Oil Temperature, Working Environment and also the type of applications. However, to prevent the Gear damage due to lubricant breakdown, the oil should be renewed as per attached schedule:

FOR USE OF OILS CONTAINING EP ADDITIVES		
Temperature (°C)	Adaptable Units (FA Type)	Other Units (FU / FO / FV Types)
75° or less	2500 hrs or 6 months whichever is less	5000 hrs or 12months whichever is less
80°	2000 hrs or 6 months whichever is less	3500 hrs or 6 months whichever is less
85°	1500 hrs or 3 months whichever is less	2500 hrs or 6 months whichever is less
90°	1000 hrs or 3 months whichever is less	1000 hrs or 3 months whichever is less

FOR USE OF OILS CONTAINING EP ADDITIVES		
Temperature (°C)	Adaptable Units (FA Type)	Other Units (FU / FO / FV Types)
75° or less	2500 hrs or 6 months whichever is less	5000 hrs or 12months whichever is less
80°	1500 hrs or 6 months whichever is less	3000 hrs or 6 months whichever is less
85°	1000 hrs or 3 months whichever is less	2000 hrs or 6 months whichever is less
90°	750 hrs or 3 months whichever is less	750 hrs or 3 months whichever is less

OIL CAPACITY FOR FENNER WORM GEARBOX UNITS

(For Single Reduction Gearbox)

Quantity in litres

SIZE	112	162	200	237	287	337
FA Type	0.1	0.3	0.3	0.6	0.9	1.4

Quantity in liters

SIZE	300	400	500	600	700	800	900	1000
FU Type	2.40	3.00	4.10	6.00	9.00	11.20	14.70	17.30
FO Type	-	2.30	2.80	4.00	5.50	9.00	10.00	11.00
FV Type	-	4.00	5.20	6.20	10.00	12.20	16.80	22.50

TROUBLE SHOOTING

Symptom	Cause	Remedy
Gearbox is getting over heated	• Unsuitable Lubricant • Less or More Lubricant than required. • Gearbox is overloaded • Very low speed or very high speed operations • Oil seal is damaged • Clogging of Breather plug • Dusty environment	• Use correct grade of oil. • Fill oil to correct level • Check the ratings • Verify the design and suitability of Gearbox • Replace the Oil Seal • Clean Breather Plug • Use of proper exhaust
Noise in Gearbox	• Unsuitable or less lubricant • Gear is damaged • Bearing is damaged • Presence of foreign matters	• Replenish or refill lubricant. • Replace Gear • Replace Bearing • Remove the Foreign matter, flush the Gearbox and replace lubricant.
Vibration	• Damaged Bearing / Worn out Bearing • Presence of Foreign Matter • Loose bolt	• Replace Bearing • Remove the Foreign matter, flush the Gearbox and replace lubricant. • Tighten the Bolts
Oil Leakage	• Oil Seal Damaged • Packing is damaged • Clogging of Breather plug • Overfilling • Abnormal vibration	• Replace Oil Seal • Replace packing • Clean Breather plug • Drain out excess oil • Eliminate the cause of vibration
Gearbox does not work	• Bearing is damaged • Gear is damaged • A solid foreign matter	• Replace Bearing • Replace Gear • Remove the Foreign matter, flush the Gearbox and replace lubricant.

OUR PRODUCT RANGE

Belts for every application

Taper Lock Bush Pullesy

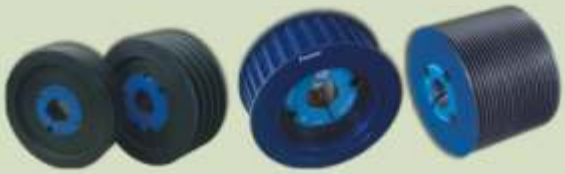

Couplings Shaft fixing & Locking Assemblies

Gear Boxes & Geared Motors Worm, Helical & Bevel

Fenner (India) Limited

Corporate office : Khivraj Complex II, Floor, 480, Anna salai, Nandanam, Chennai-600035 Tel: 24312450 to 57, Fax: 044-24349016, 24320193. E.mail : pdt_mhq@fennermail.com
Website: www.fennerindia.com

Registered Office : 3, Madurai-Melakkal Road, Kochadai, Madurai- 625 016.
Tel: 2383801, 2383802, Fax : 0452-2383822

Branches at: Ahmedabad: Shreeji House, 3rd Floor, Behind M.J.library, Ellis Bridge, Ahmedabad-386 006. Tel: 079-26578572, 26578590. **Bangalore:** No.20, New Timber Yard Layout, Mysore Road, Bangalore – 560 026. Tel: 080-26756333, Fax : 080-26756333. **Indore:** 24, Sitabagh Colony, Dhenu Market, Indore-452 001, Tel: 0731-4043935. **Jaipur:** A-21, Opp. State Bank of India, Bais Godown, Industrial Area, Jaipur-302006, Tel: 0141-2211075, 93148 70878. **Kanpur:** 112/371(A), Swaroop Nagar, Kanpur – 208 002, Tel:0512-2525304, 2540915, Fax: 0512-2294071. **Kochi:** 32/364-A, A-II, masjid Road, Palarivattom, Kochi-682025 Tel: 0484-3242480, 98950 71066. **Kolkata:** 56-D, Mirza Ghalib Street, Kolkata-700 016. Tel: 033-22298784, 22298791 Fax: 033-22290701, 22297880. **Ludhiana:** B-XVII/2820/48, Opp to Adam park, Jummu Colony, LInk Road, Ludhiana- 141 003. Tel: 0161-2410214, Telefax:0161-2443791. **Madurai:** 117/6E, Madurai-Usilampatti Road, Meenakshipuram, Madurai-625 016. Tel: 0452-2383920, Telefax:0452-2383921. **Mumbai:** 19/21, Manohardas Street, P.B. No. 1307, Opp.G.P.O., Fort, Mumbai-400 001. Tel: 022-22695040, 22696329, 22697041, Fax: 200-22695199. **New Delhi:** 7th Floor, 'Hansalaya', 15, Barakhamba Road, New Delhi-110 001. Tel:011-23314053, 23317016, 23314429. **Secunderabad:** No.156/8, Plot No.147, A.P.Text Book Colony, Transport Road, Secundrabad-500 015 Tel:040-27845443, 27845444.

All rights reserved by Fenner (India) Limited. No portion of the catalogue can be reproduced without authorisation of the copyright owner.